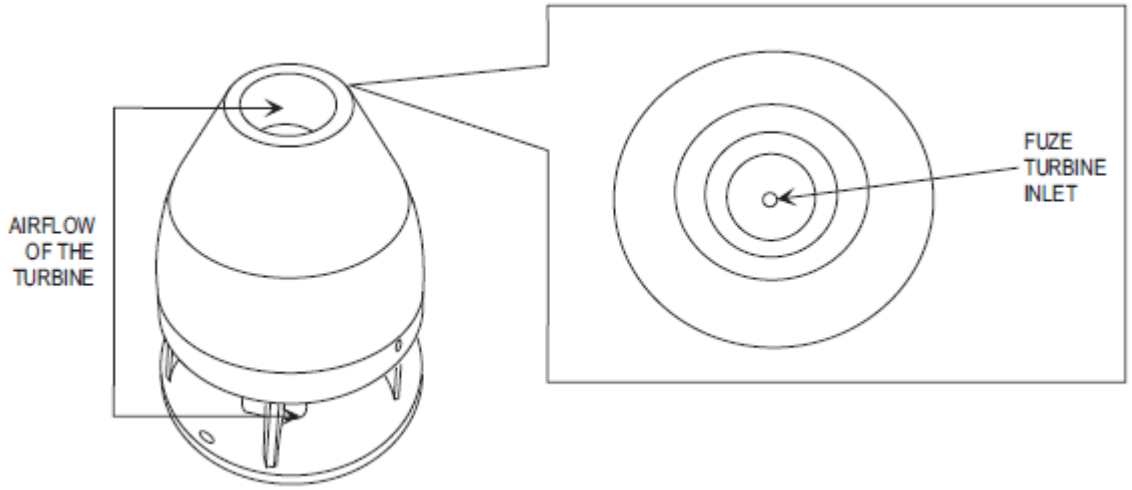ATTACHMENT AIN 016-16A (FUZE DRAWING)