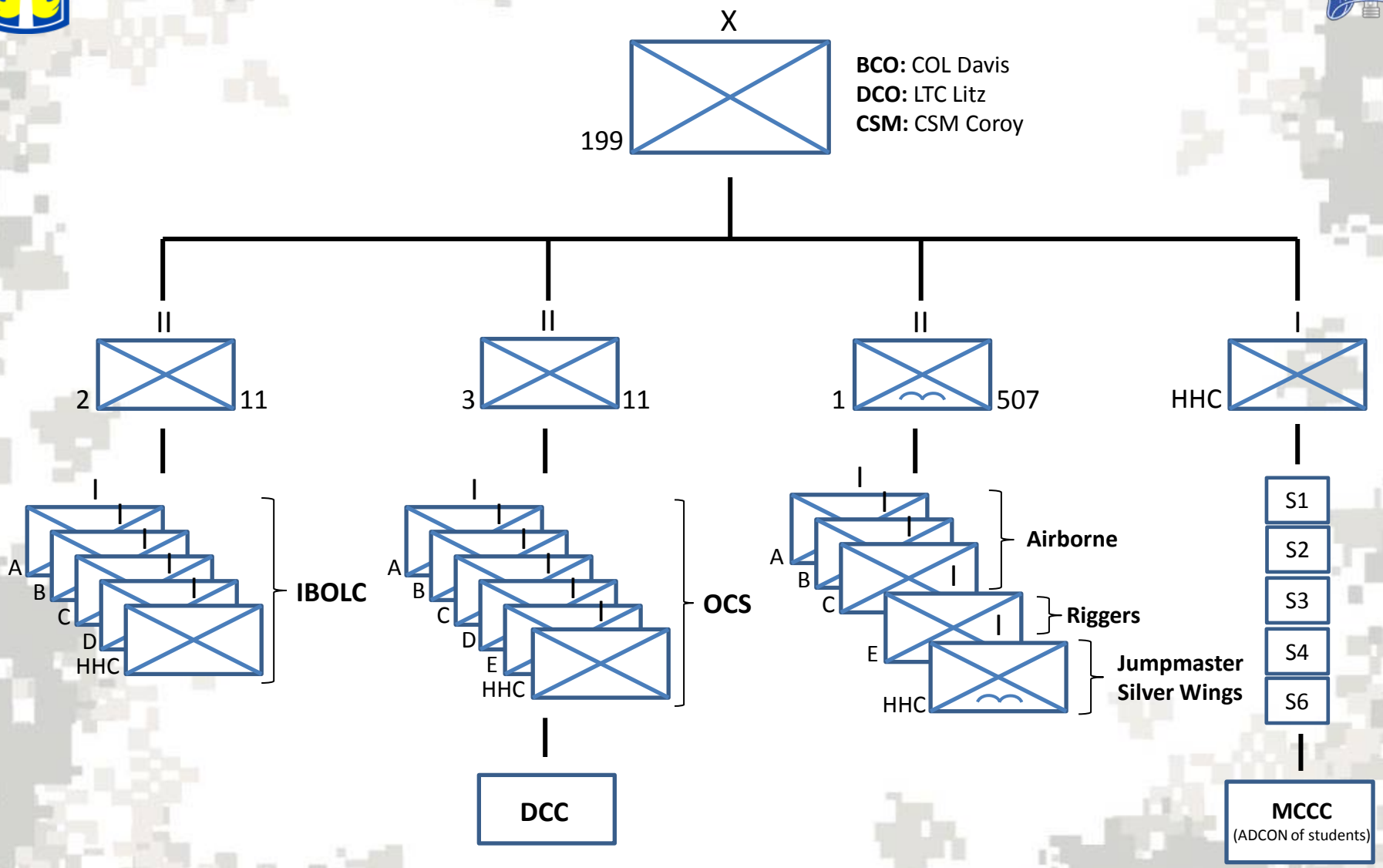199TH BRIGADE TASK ORGANIZATION CHART